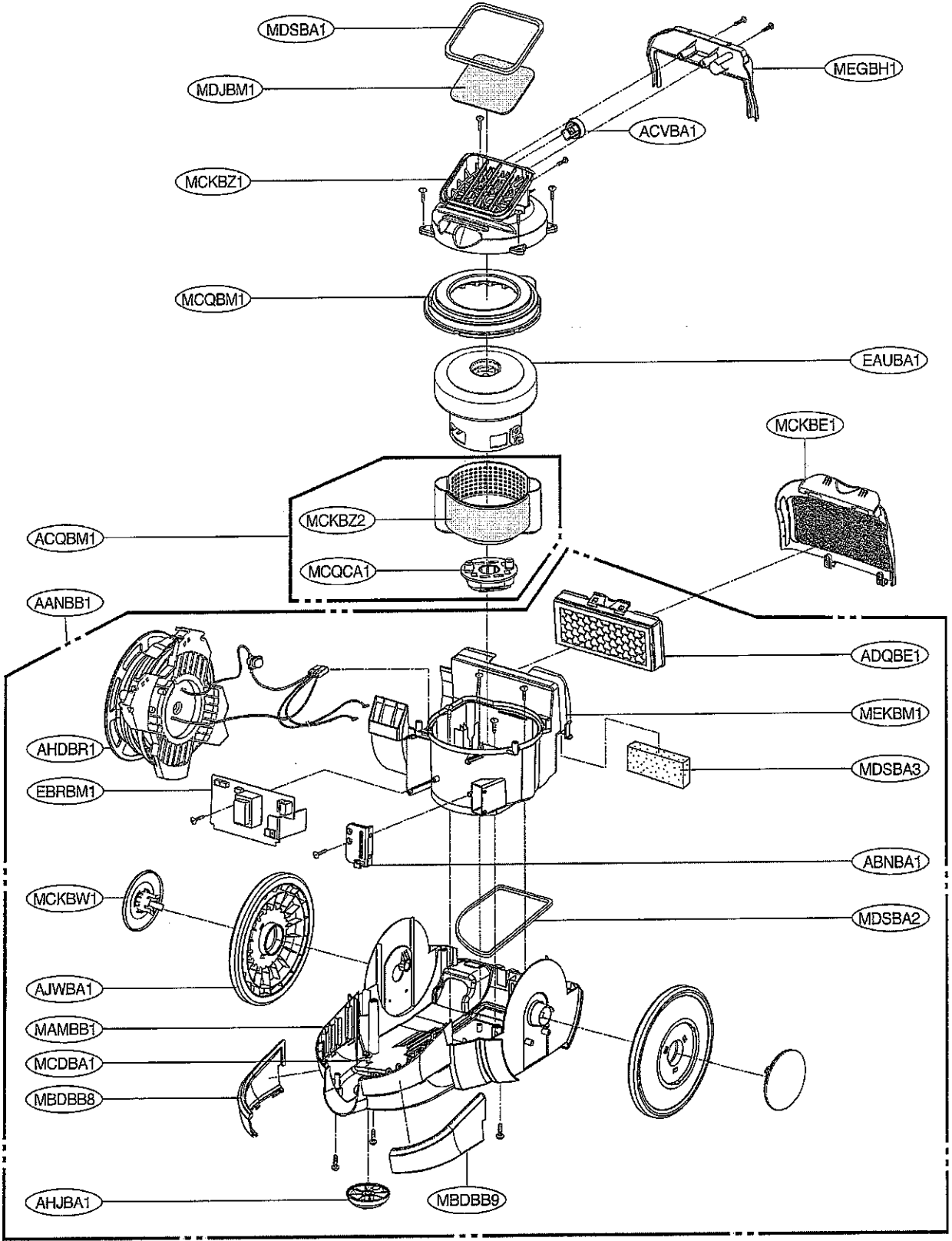
MDSBA1
MEGBH1
MDJBM1
ACVBA1
MCKBZ1
MCQBM1
EAUBA1
MCKBE1
MCKBZ2
ACQBM1
MCQCA1
AANBB1
ADQBE1
MEKBM1
AHDBR1
MDSBA3
EBRBM1
ABNBA1
MCKBW1
MDSBA2
AJWBA1
MAMBB1
MCDBA1
MBDBB8
AHJBA1
MBDBB9

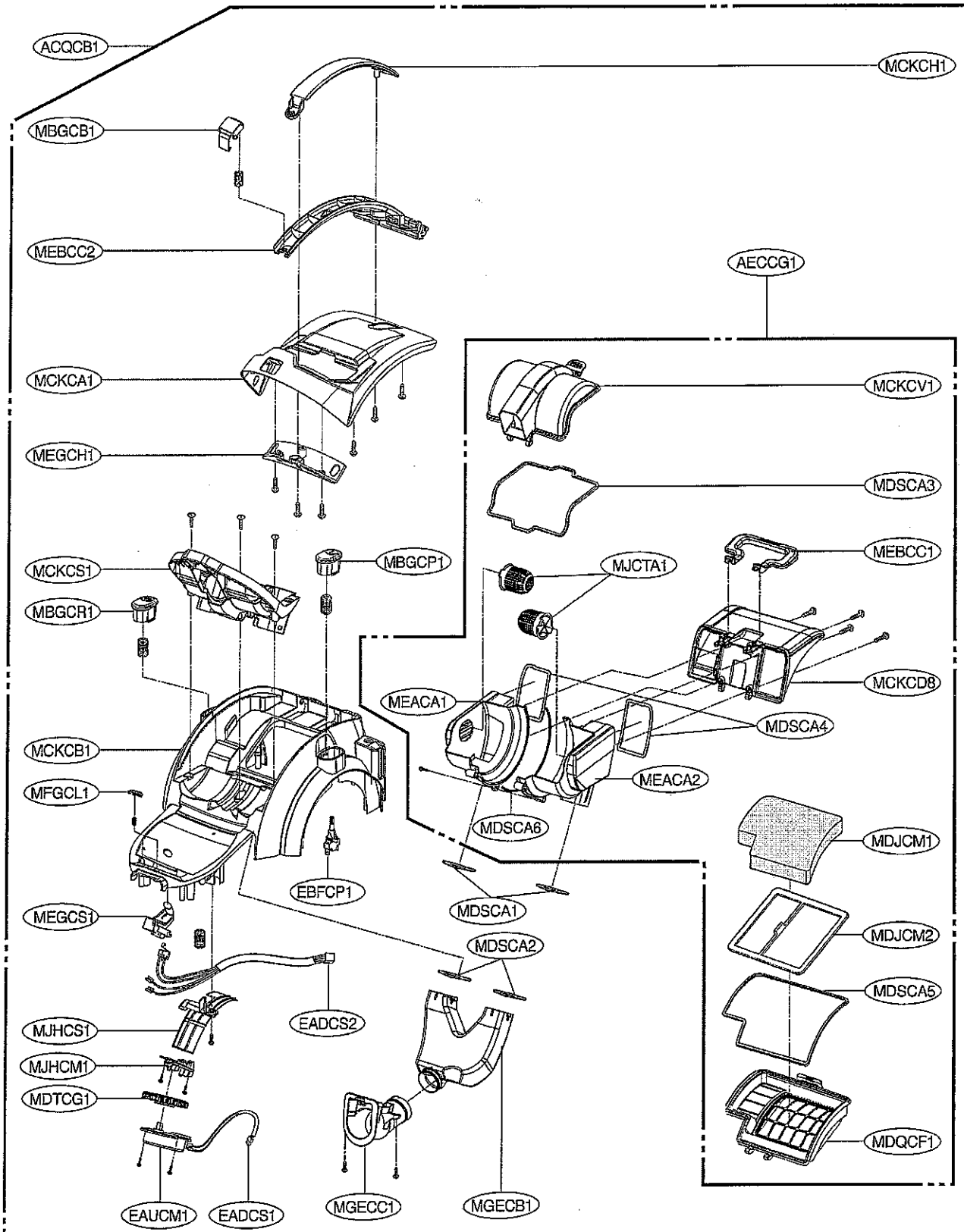
ACQCB1
MCKCH1
MBGCB1
MEBCC2
AECCG1
MCKCA1
MCKCV1
MEGCH1
MDSCA3
MCKCS1
MBGCP1
MJCTA1
MEBCC1
MBGCR1
MCKCD8
MEACA1
MDSCA4
MCKCB1
MEACA2
MFGCL1
MDSCA6
MDJCM1
EBFCP1
MDSCA1
MEGCS1
MDJCM2
MDSCA2
MDSCA5
EADCS2
MJHCS1
MJHCM1
MDTCG1
MDQCF1
EAUCM1
EADCS1
MGECC1
MGECB1

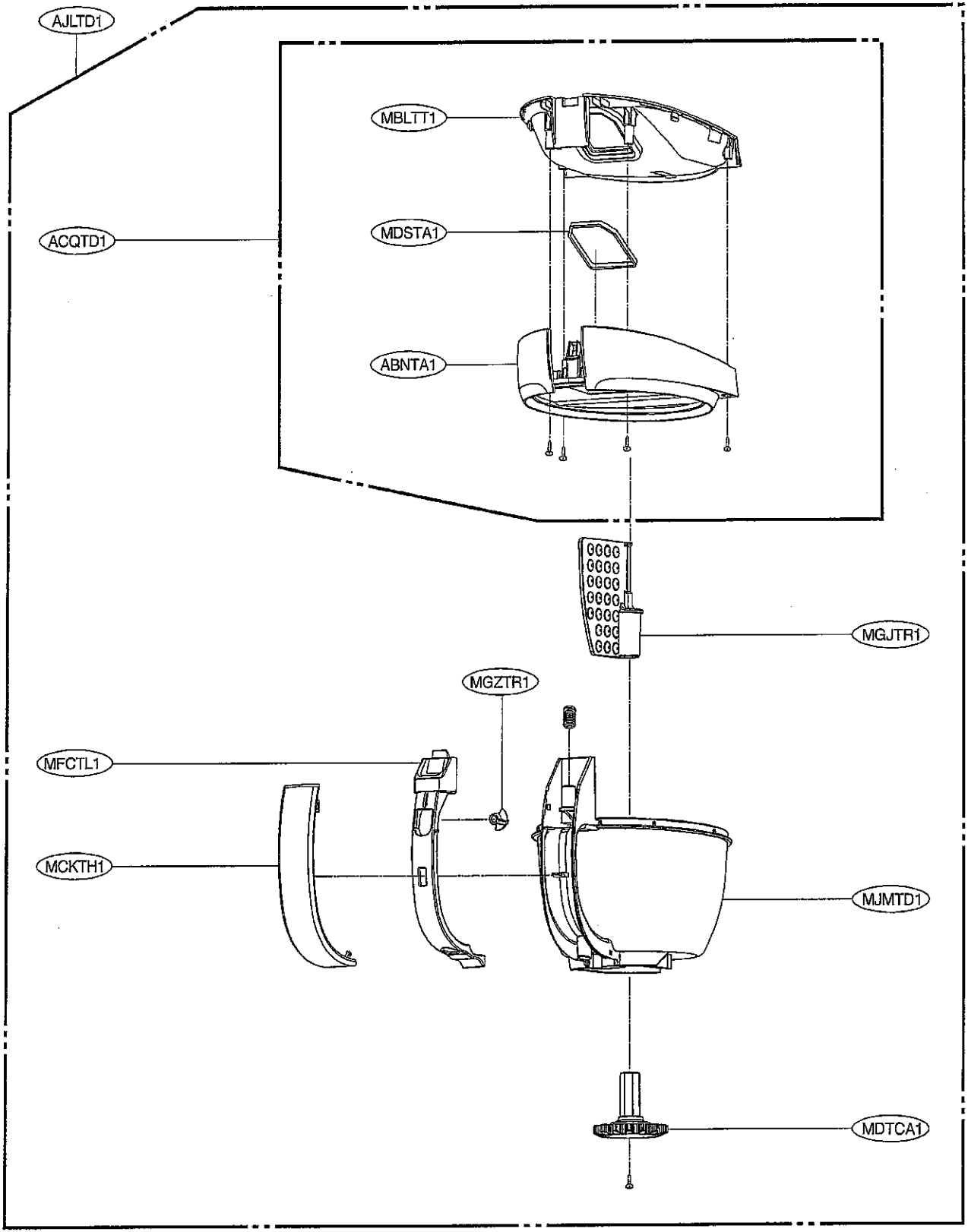
AJLTD1
MBLTT1
ACQTD1
MDSTA1
ABNTA1
MGJTR1
MGZTR1
MFCTL1
MCKTH1
MJMTD1
MDTCA1

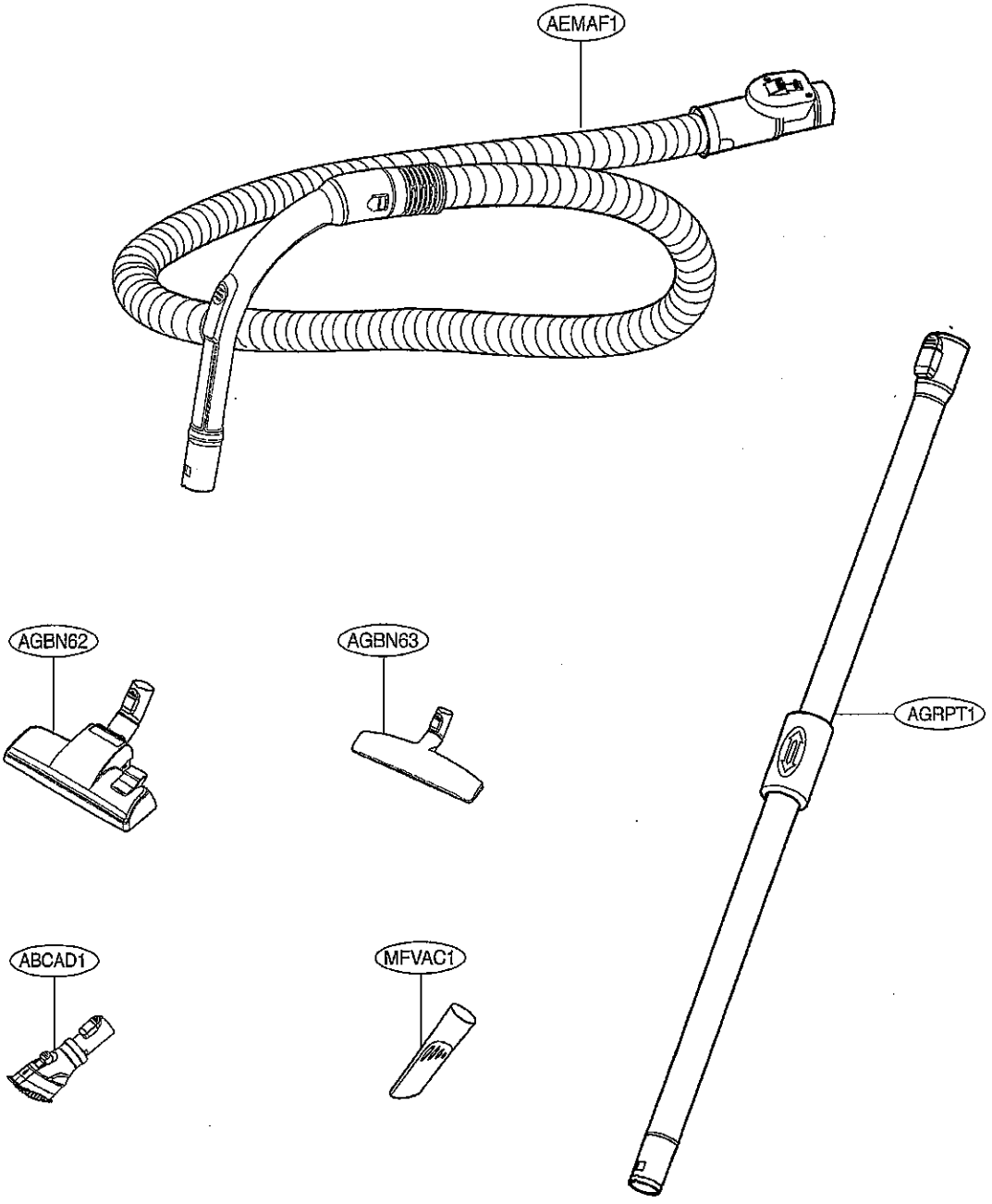
AEMAF1
AGBN62
AGBN63
AGRPT1
ABCAD1
MFVAC1